Lab 9
Flip-flops and Counters

Digital System Fundamentals

Sorayut Glomglome

Objectives

- Construct D-FF and JK-FF using VHDL.
- Construct a counter from flip-flops.
- Display counter output via 7 segment.

Leaning Outcome

- Construct a counter from given flip-flops.
- Display counter output using 7seg on Basys3.

1. Flip-flops

D Flip-flop with active high reset

```
Library IEEE;
USE IEEE.Std_logic_1164.all;

-- Positive edge-triggered D flip flop with active-high asynchronous reset
entity D_FF is
   port(
      Q     :   out std_logic;
      clk   :   in  std_logic;
      reset :   in  std_logic;
      D     :   in  std_logic
   );
end D_FF;

architecture behavioral of D_FF is
begin

    process(clk, reset)
    begin
        if(reset = '1') then
            Q <= '0';
        elsif(rising_edge(clk)) then
            Q <= D;
        end if;
    end process;

end behavioral;
```

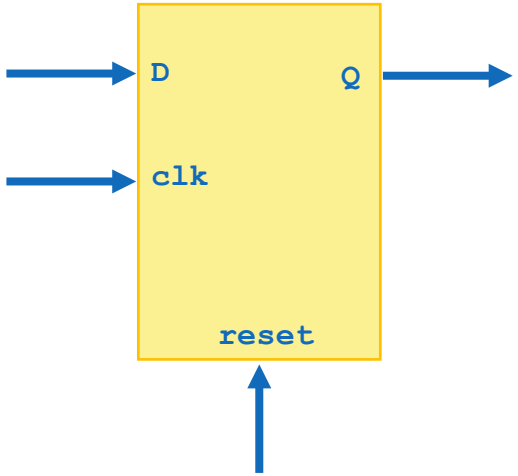

JK Flip-flop with active-high reset

```
library IEEE;
use IEEE.STD_LOGIC_1164.ALL;


entity JK_FF is
  port (clk, J, K, reset : in std_logic;
        Q   : out std_logic);

end JK_FF;

architecture behavioral of JK_FF is

    signal next_state : std_logic := '0';

    begin

        Q <= next_state;

        JKFF : process(clk,reset) is
        begin

            if(reset = '1') then
                next_state <= '0';
            --elsif (falling_edge(clk)) then
            elsif (rising_edge(clk)) then
                if (J = '1' and K = '1') then
                    next_state <= not next_state;
                elsif (J = '1') then
                    next_state <= '1';
                elsif(K = '1') then
                    next_state <= '0';
                end if;
            end if;
        end process JKFF;

end behavioral;
```

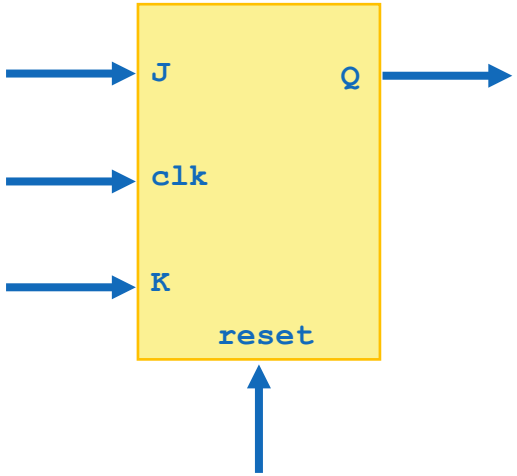

2. Clock Divider

Clock Divider

- Basys3 has 100 MHz clock on pin W5.
- Use counter to divide clock frequency.
- Count 100,000 values
  - 1 ➔ 100,000 ➔ 1
  - 0 ➔ 99,999 ➔ 0
- 100 MHz / 10^5 = 1 KHz
- 1 KHz ➔ 1 ms period

```
22
23  library IEEE;
24  use IEEE.STD_LOGIC_1164.ALL;
25  use IEEE.numeric_std.ALL;
26
27  entity Clock_Divider is
28      port ( clk, reset   : in std_logic;
29             clk_out    : out std_logic);
30  end Clock_Divider;
31
32  architecture behavioral of Clock_Divider is
33
34      signal count    : integer   := 0;
35      signal tmp      : std_logic := '0';
36
37      begin
38
39          clk_out <= tmp;
40
41          process(clk,reset)
42              begin
43                  if(reset = '1') then
44                      count <= 0;
45                      tmp <= '0';
46
47                  elsif(rising_edge(clk)) then
48                      count <= count+1;
49                      if (count > (100000-1)) then
50                          count <= 0;
51                          tmp <= not tmp;
52                      end if;
53                  end if;
54          end process;
55
56
57  end behavioral;
58
```

VHDL Integer Size

VHDL has seen its rise when the predominant computer architecture was of 32 bits. Although the standard doesn't explicitly specify this - almost all FPGA design software defines the range of an integer as -2,147,483,647 to +2,147,483,647. This is the default. Feb 24, 2563 BE

hardwarecoder.com
https://hardwarecoder.com › vhdl-integer-range

VHDL Integer Range? - Hardware Coder

Checkpoint 1

A 3-Bit Synchronous Counter Using JK-FF

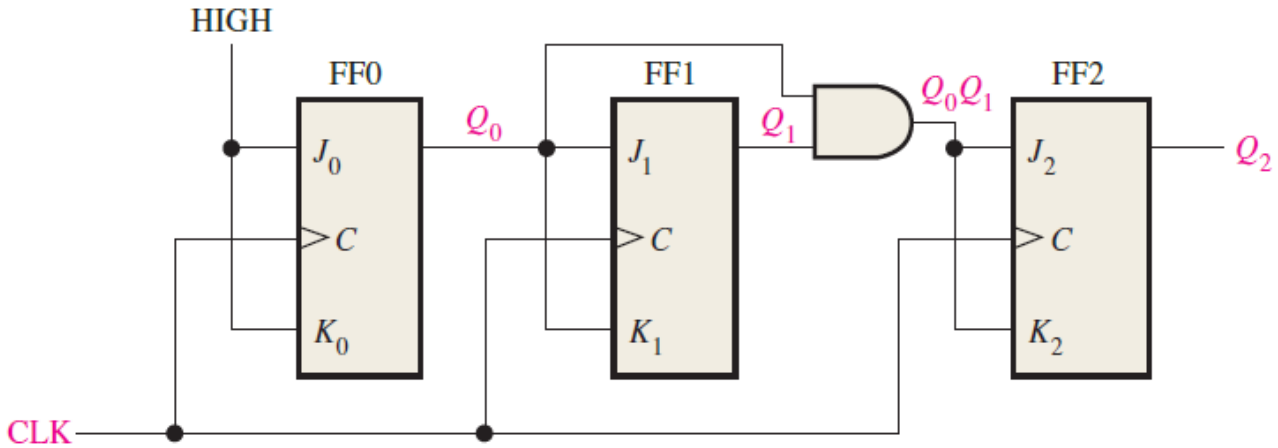

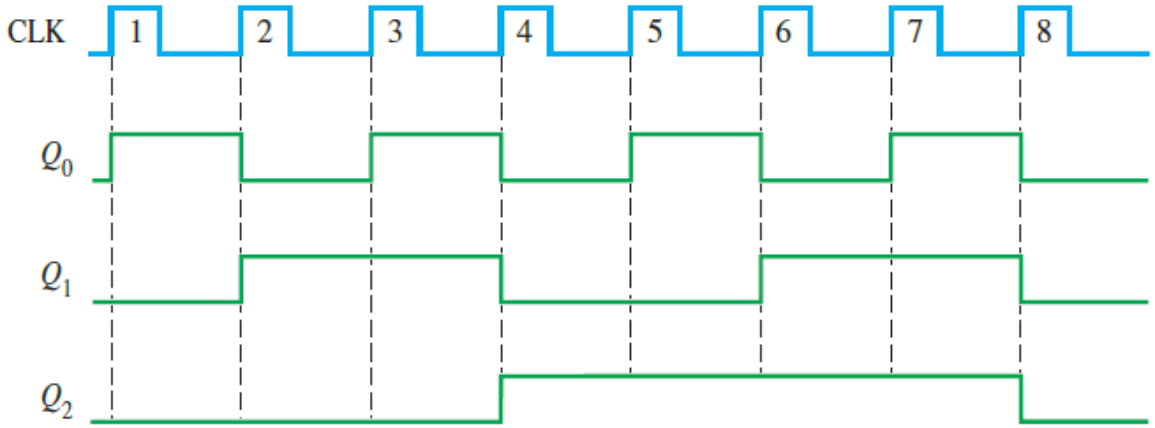

TABLE 9–3

State sequence for a 3-bit binary counter.

Clock Pulse	Q_2	Q_1	Q_0
Initially	0	0	0
1	0	0	1
2	0	1	0
3	0	1	1
4	1	0	0
5	1	0	1
6	1	1	0
7	1	1	1
8 (recycles)	0	0	0

Basys 3 Reference Manual

- [Basys 3 Reference Manual - Digilent Reference]

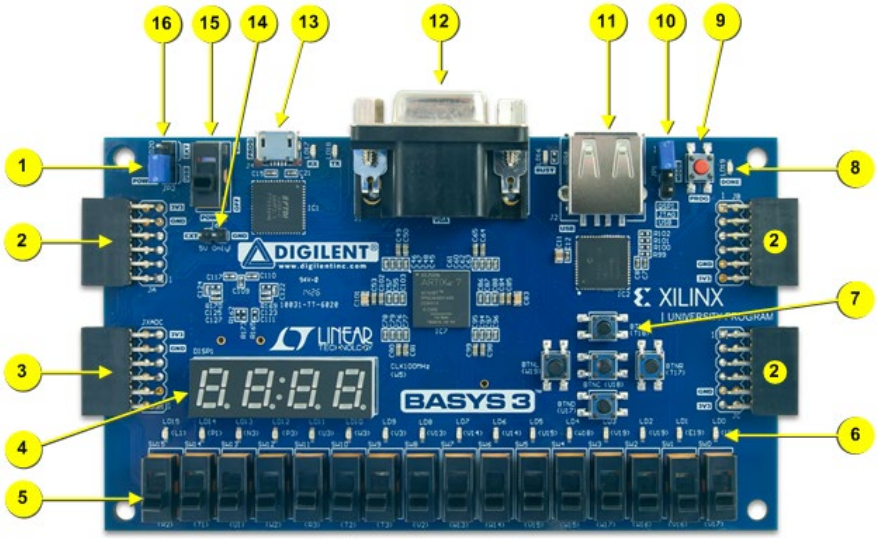

Figure 1. Basys3 board features

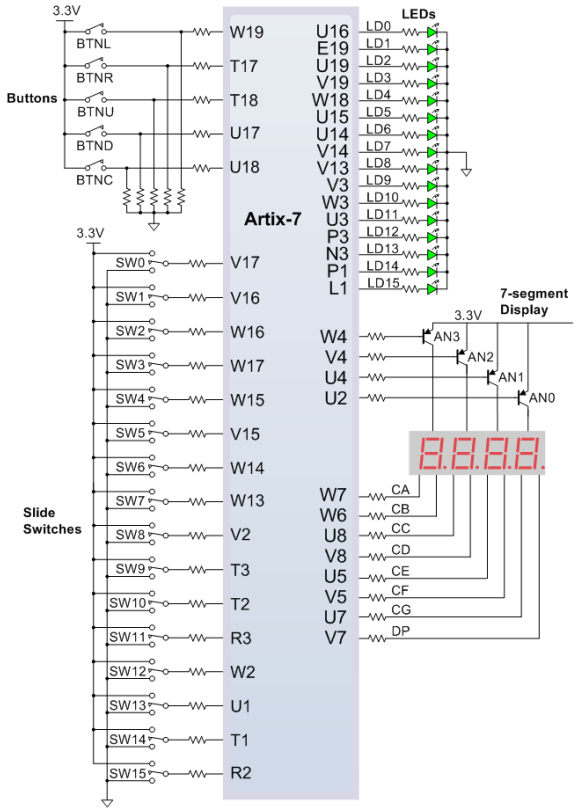

Checkpoint 1

- Construct 3-bit synchronous counter using JK-FF.
  - Dataflow & structural coding style only.
- Use pin T17 as reset button.
- Use pin W5 as 100 MHz input clock.
- Adjust clock frequency to **1 Hz** using **clock divider**.
- Display counter output by 3 LEDs (**LD12** as MSB, **LD11** and **LD10**).
- Simulate & test individual entity first.
  - Create 3 projects: JK-FF, clock divider, and 3-bit counter.
  - When submitting, show TA the simulation results from 3 projects and test the 3-bit counter project on Basys 3 board.

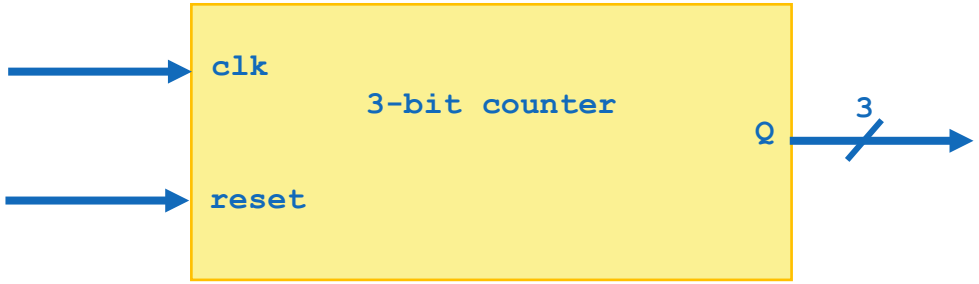

Force clock on `clk` signal in manual simulation

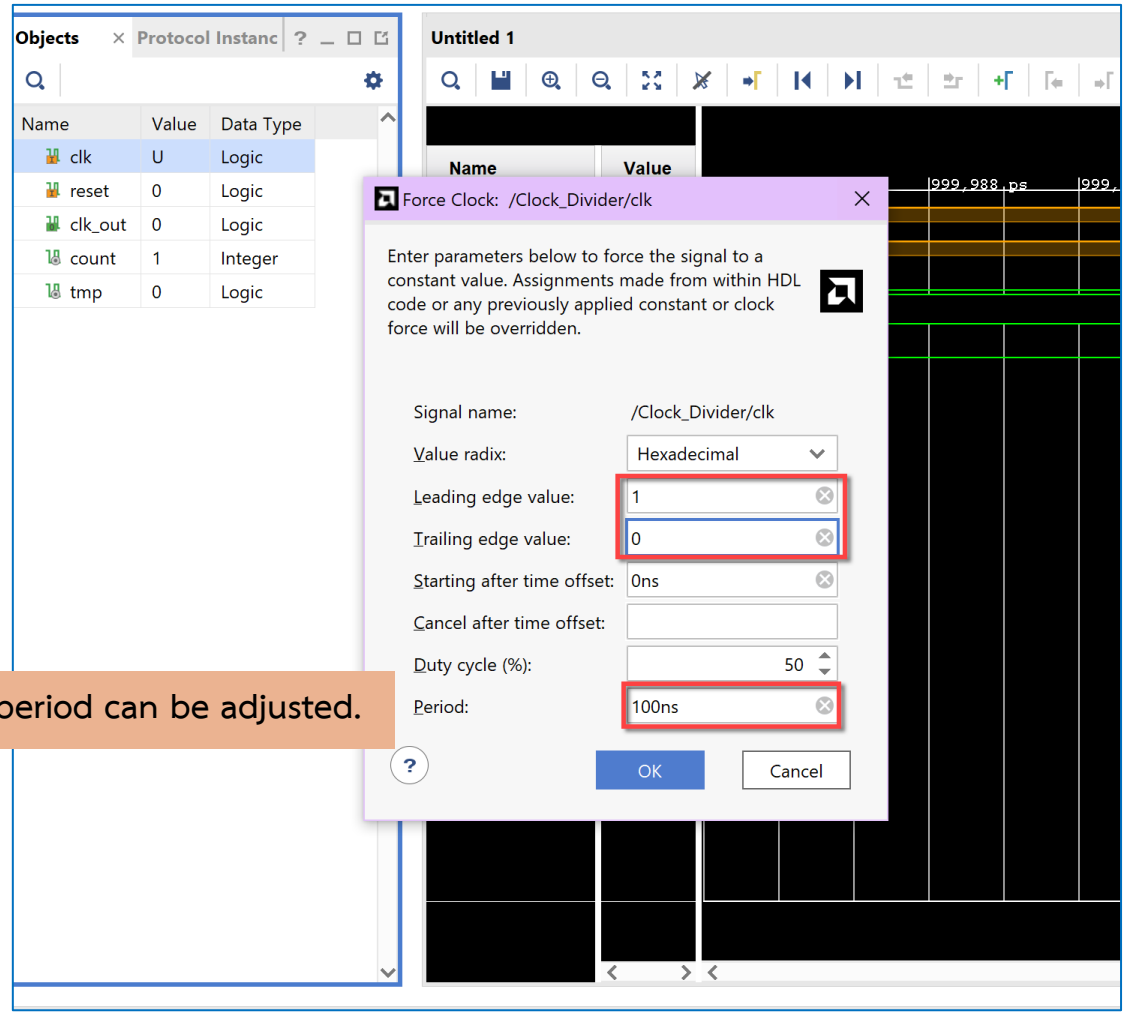

Clock period can be adjusted.

Force clock on `clk` signal in manual simulation

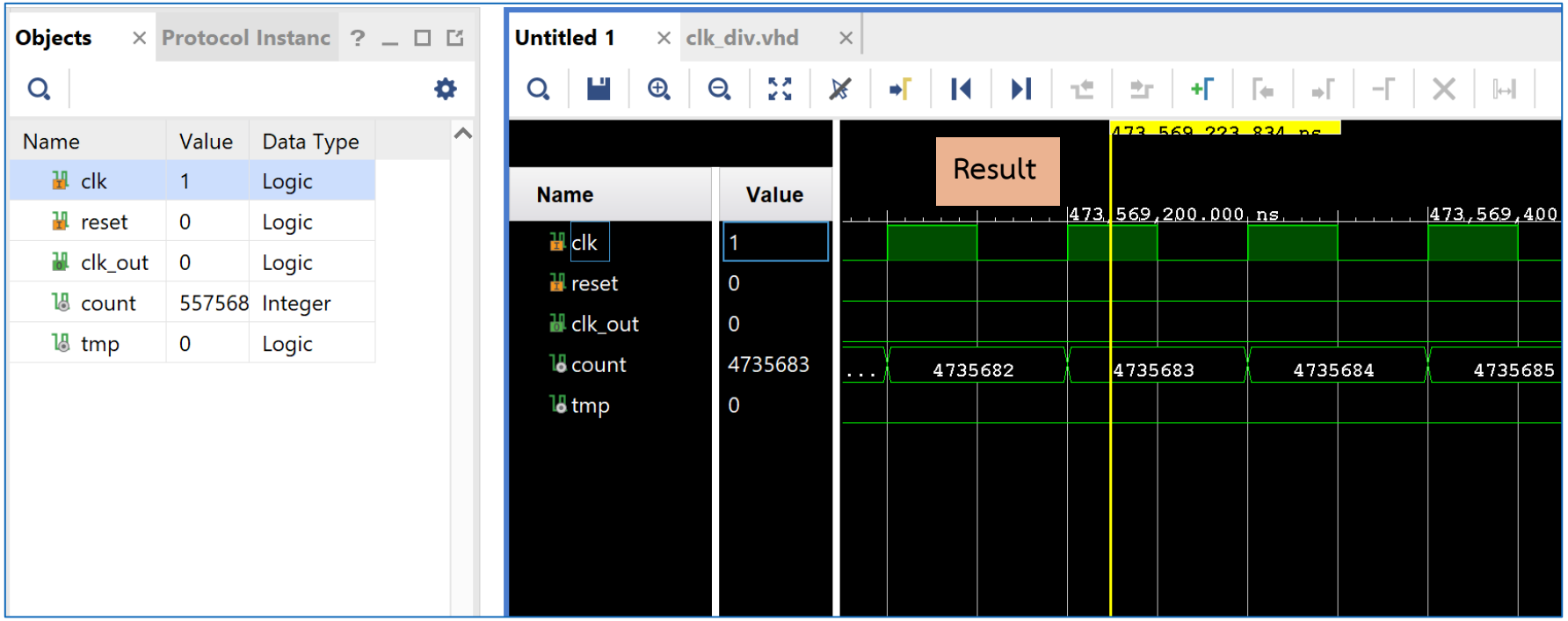

Checkpoint 2

Checkpoint 2

- Display the counter output from **Checkpoint 1** using 7SEG.
  - Dataflow & structural coding style only.
- Reuse **sseg_decoder** from Lab 8.
  - The interface (input & output ports) may need to be adjusted.
- Test on Basys 3 board.

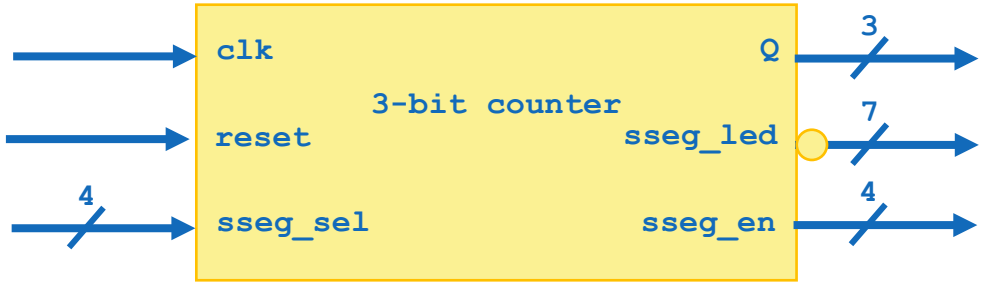

Assigning 2 signals that have different size

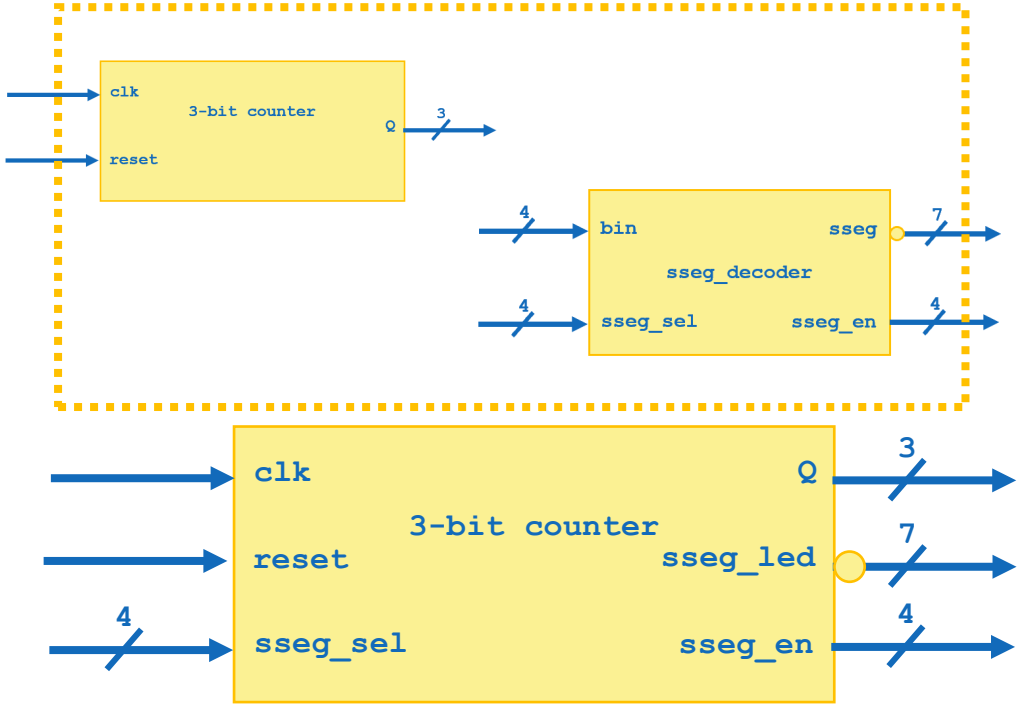


```
41 architecture Behavioral of sseg_decoder is
42
43     signal a : std_logic_vector (3 downto 0);
44     signal b : std_logic_vector (2 downto 0);
45 begin
46
48
49     -- First solution : concatenate with logic 0
50     a <= '0' & b;
51
52     -- Second solution : assign bit by bit
53     a(0) <= b(0);
54     a(1) <= b(1);
55     a(2) <= b(2);
56     a(3) <= '0';
57
58     -- This solution cannot guarantee MSB value of signal a
59     a <= b;
60
```

THANK YOU